HC2010

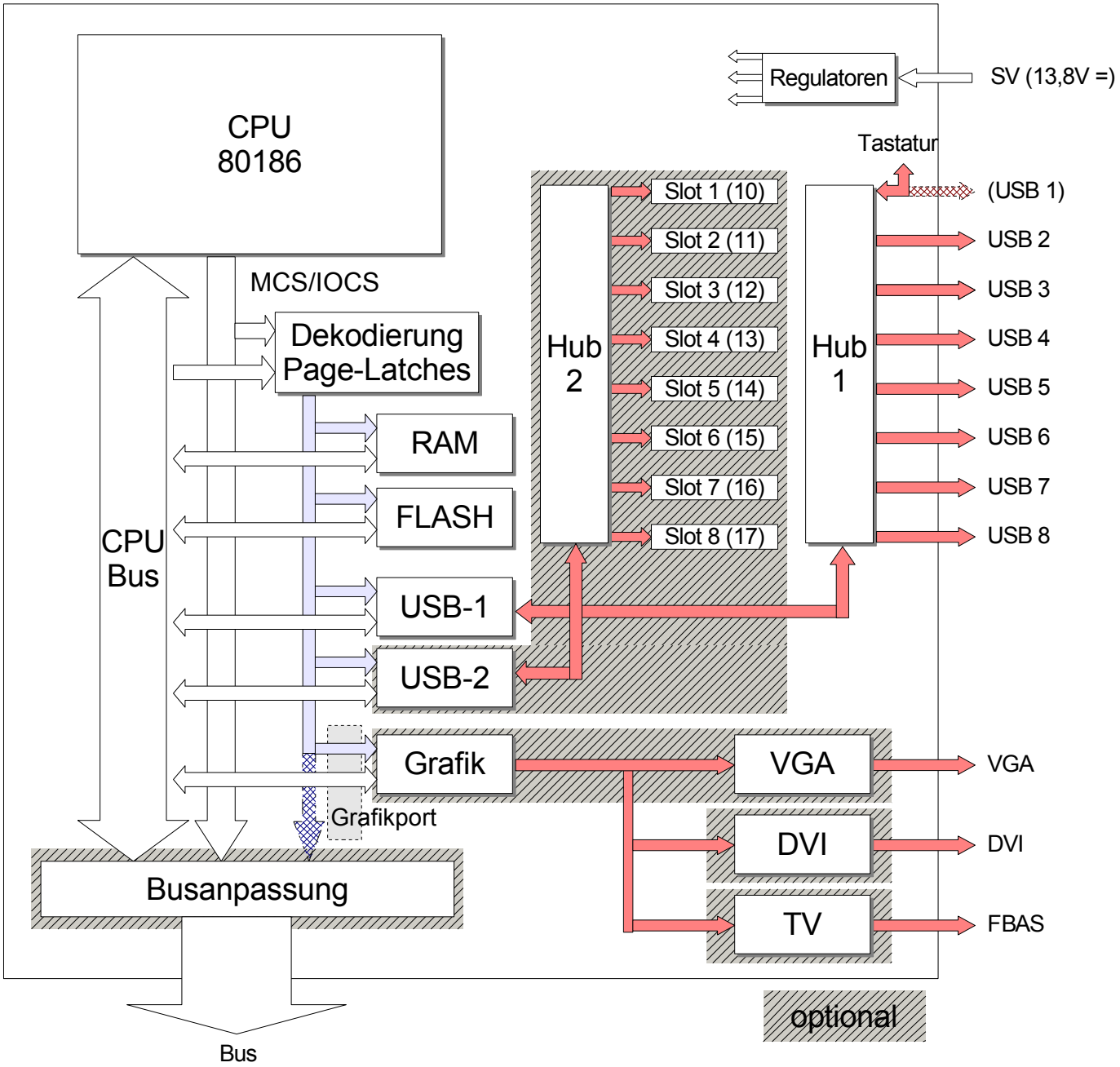
CPU
80186
Regulatoren
SV (13,8V =)
Tastatur
(USB 1)
USB 2
USB 3
USB 4
USB 5
USB 6
USB 7
USB 8
Slot 1 (10)
Slot 2 (11)
Slot 3 (12)
Slot 4 (13)
Slot 5 (14)
Slot 6 (15)
Slot 7 (16)
Slot 8 (17)
Hub 2
Hub 1
MCS/IOCS
Dekodierung
Page-Latches
RAM
FLASH
CPU
Bus
USB-1
USB-2
Grafik
VGA
VGA
Grafikport
DVI
DVI
Busanpassung
TV
FBAS
optional
Bus